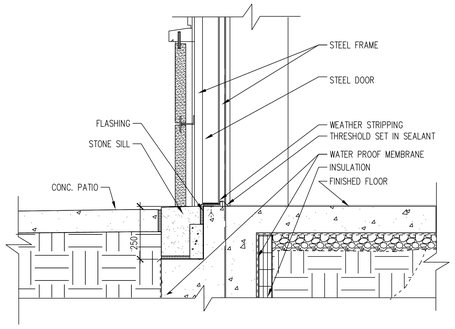

1 A302 A501 DOOR DETAIL– SILL
1:10

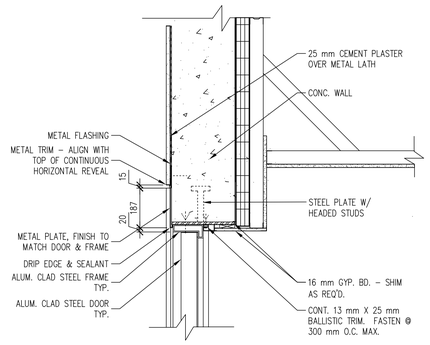

2 A302 A501 DOOR DETAIL
1:10

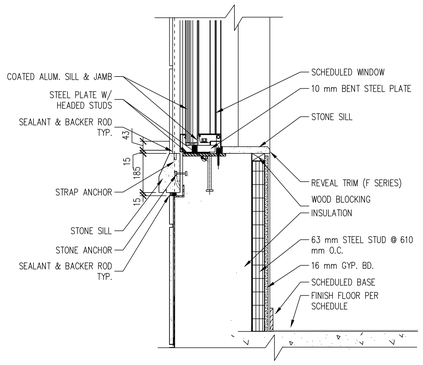

3 A302 A501 WINDOW SILL DETAIL (B-1)
1:10

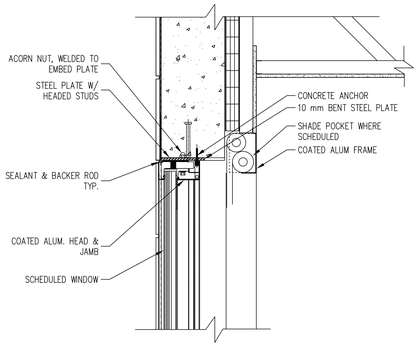

4 A302 A501 WINDOW HEAD DETAIL (B-1)
1:10

0 200 400 800
1:10

ALL DIMENSIONS WITHOUT A DECIMAL ARE IN MILLIMETERS UNO. ALL DIMENSIONS WITH A DECIMIAL ARE IN METERS UNO.

National Institute of Building Sciences
building Smart Alliance
Washington, DC

Barracks 101

Building Information Model Common File

WARNING: All building models provided by buildingSMART alliance are licensed under a Creative Commons Attribution–NoDerivs 3.0 Unported License.

National Institute of Building Sciences
buildingSMARTalliance
Washington, DC 20005

Rev Number	Description	Date
Revisions		

Release For Construction:
NIBS/Ide | NIBS/Ide

Drawing Title
EXTERIOR WALL DETAILS

OBO Project Number	Drawing Scale AS NOTED	Phase ☒ REP ☐ CONCEPT ☐ 30% ☐ 60% ☐ 90% ☐ 100% ☐ FINAL
CADD File Name CBMA501.DWG	CADD Plot Scale 1:1	

Date	NOV–2012
Drawn By	NIBS
Checked By	NIBS
Project Number	
Classification	UNCLASSIFIED

Sheet Number
Barracks
A501