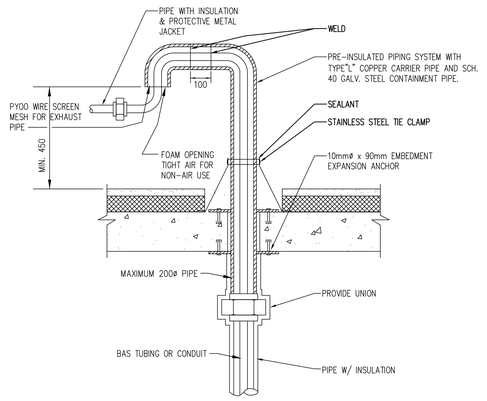

NOTES:
1. THIS DETAIL IS USED FOR BALLISTIC PROTECTION OF PIPES AND CONDUITS IN HARDLINE ROOFS.
2. PENETRATION MUST BE LESS THAN 620 SQ CM.

1 M501 ROOF PENETRATION DETAIL
NOT TO SCALE

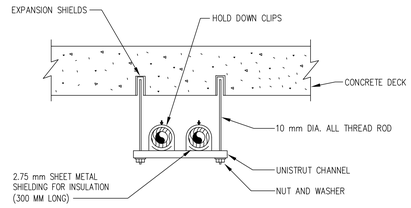

2 M501 TRAPEZE PIPE HANGER
NOT TO SCALE

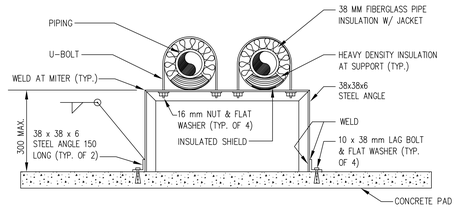

3 M501 EQUIPMENT PAD PIPE SUPPORT DETAIL
NOT TO SCALE

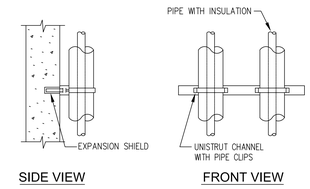

4 M501 WALL SUPPORT FOR VERTICAL PIPING
NOT TO SCALE

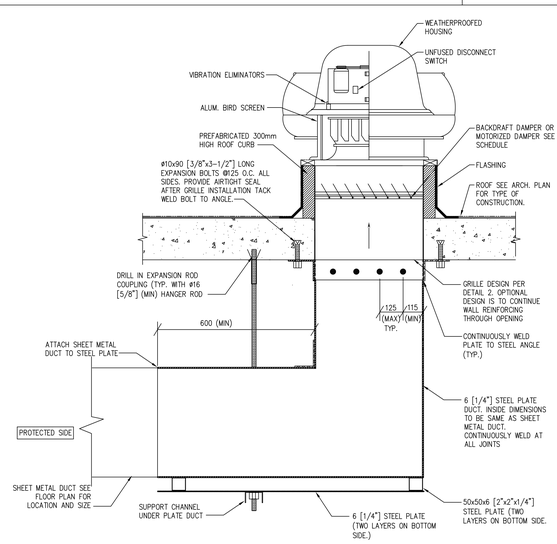

5 M501 ROOF MOUNTED EXHAUST FAN DETAIL/ROOF DUCT PENETRATION
NOT TO SCALE
PP-23-03 (MODIFIED

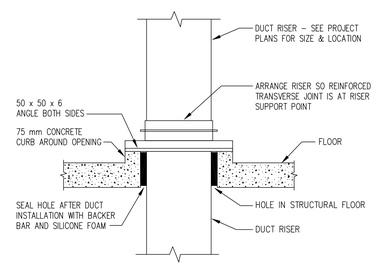

6 M501 DUCT RISER SUPPORT DETAIL
NOT TO SCALE

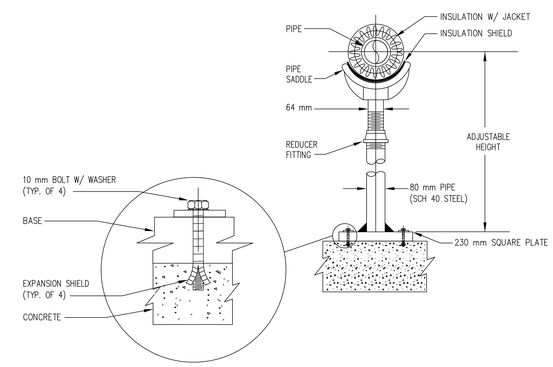

7 M501 ADJUSTABLE PIPE SUPPORT DETAIL
NOT TO SCALE

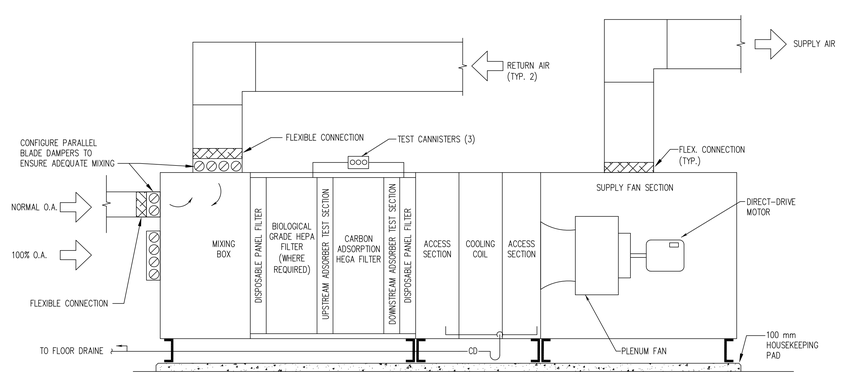

8 M501 TYPICAL AHU CONFIGURATION
NOT TO SCALE

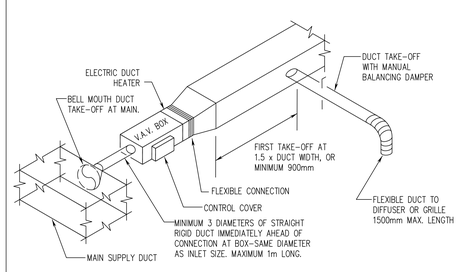

NOTE:
1. CONNECTION TO DIFFUSER, ETC. SHALL BE DIRECT RUN WITH LEAST BENDS. TAKE-OFF MAY BE FROM TOP SIDE OR BOTTOM OF BRANCH DUCT.
2. PROVIDE ADEQUATE MAINTENANCE ACCESS TO ALL VAV BOXES. ACCESS DOORS SHALL BE PROVIDED IN CEILING CONSTRUCTION WHERE NECESSARY.

9 M501 VAV BOX INSTALLATION DETAIL
NOT TO SCALE

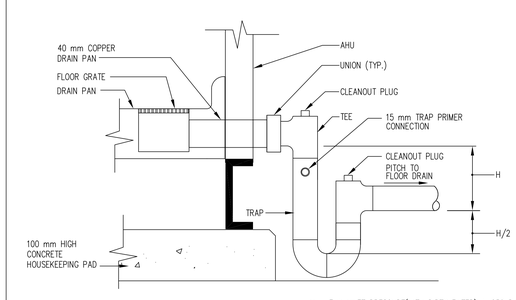

H = FAN INLET PRESSURE(WITH DIRTY FILTER) + 250 Pa

NOTES:
1. AHU MANUFACTURER TO RAISE DRAIN PAN AS REQUIRED TO HAVE SUFFICIENT SPACE BELOW DRAIN PAN FOR TRAP.
2. PITCH DRAIN FOR PROPER RUN-OFF AND RUN PIPE IN DIRECTION TO OPEN FLOOR DRAIN.
3. MANUALLY PRIME FILL TRAP BEFORE START-UP TO FORM INITIAL DRAIN SEAL.
4. SUPPORT LENGTHY DRAIN LINES TO PREVENT SAG AND CONDENSATE OVERFLOW.

10 M501 CONDENSATE DRAIN TRAP DETAIL
NOT TO SCALE

National Institute of Building Sciences
building Smart Alliance
Washington, DC

Barracks 101
Building Information Model Common File

WARNING: All building models provided by buildingSMART alliance are licensed under a Creative Commons Attribution-NoDerivs 3.0 Unported License.

National Institute of Building Sciences
buildingSMARTalliance
Washington, DC 20005

GENERAL NOTES:
1. DESIGN MECHANICAL SYSTEMS PER THE LATEST VERSION OF THE INTERNATIONAL MECHANICAL CODE (IMC) AND OWNER DESIGN REQUIREMENTS AND SPECIFICATIONS.
2. EQUIPMENT, DUCTWORK, AND PIPING SIZES AND LOCATIONS ARE SCHEMATIC IN NATURE. ACTUAL SIZES AND LOCATIONS ARE TO BE BASED ON SITE-SPECIFIC CONDITIONS AND OWNER DESIGN STANDARDS AND SPECIFICATIONS.

Rev Number	Description	Date
Revisions		

Release For Construction:
NBIS/Mw NBIS/Mw

Drawing Title
DETAILS

OBD Project Number
CADD File Name CBMM501.DWG
Drawing Scale AS NOTED
CADD Plot Scale 1:1
Phase ☒ REF ☐ CONCEPT ☐ 30% ☐ 60% ☐ 90% ☐ 100% ☐ FINAL

Date NOV-2012
Drawn By NIBS
Checked By NIBS
Project Number
Sheet Number Barracks M501
Classification UNCLASSIFIED